SERAPID
RIGID CHAIN TECHNOLOGY

Dimensions

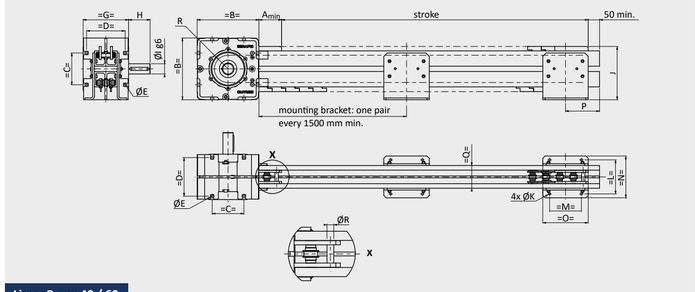

LinearBeam 40 / 60

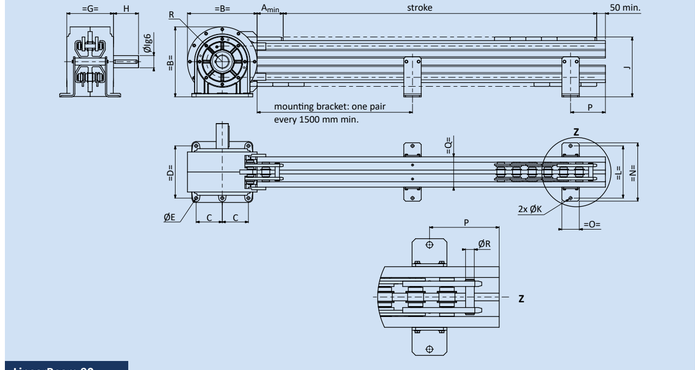

LinearBeam 90

model	max. kN	R	A_{min}	B	C	D	E	G	H	I	J	K	L	M	N	O	P	Q	S
LB 40	7.5	40	66	202	120	140	10	168	59	25	168	10	130	90	160	150	100	80	10
LB S60	25	60	100	272	140	170	14	200	95	45	235	11	150	140	184	200	150	100	15
LB D60	37	60	100	272	140	170	14	245	72	60	235	11	195	140	229	200	150	144	15
LB J60	50	60	100	272	140	170	14	259	72	60	235	11	209	140	243	200	150	168	15
LB S90	80	90	150	400	150	300	18	268	144	70	344	18	300	–	335	100	200	174	25
LB D90	130	90	150	400	150	300	18	356	164	100	344	18	388	–	423	100	200	264	25
LB J90	160	90	150	400	150	300	18	375	164	100	344	18	407	–	442	100	200	283	25
special	160+	on demand																	

All dimensions in mm.

Ordering your specific LinearBeam:

To order a LinearBeam unit or to obtain advice about selecting a suitable model, have the following information at hand:

	information	remarks	
model	**LB ...**	**load: kg**	**pushing / pulling force: N**
stroke	**m**		
horizontal speed	**mm/s**	speeds > 200 mm/s require a frequency converter	
vertical speed	**mm/s**	speeds > 50 mm/s require a frequency converter	
cadence		cycles per day:	days per year:
option 1: protective bellows	☐ yes		
option 2: oil bath	☐ yes		
option 3: guided load interface	☐ yes		
option 4: free load interface	☐ yes		
option 5: CAM switch / encoder	☐ A ☐ B	number of positions:	☐ absolute ☐ incremental
option 6: side of shaft output	☐ A ☐ B	type of gear motor / reducer:	
option 7*: gear motor /reducer	☐ yes	brand:	

* If the gear motor / reducer is supplied by the user, type and brand should be specified.

SERAPID France – Head Office
ZI Louis Delaporte, Zone Bleue, Voie F
F-76370 Rouxmesnil-Bouteilles | Frankreich
+33 (0)2 32 06 35 60
info-fr@serapid.com

SERAPID Ltd
Elm Farm Park, Great Green, Thurston,
Bury St Edmunds | IP31 3SH England
+44 (0)1359 233335
info-uk@serapid.com

SERAPID Deutschland GmbH
Wilhelm-Frank-Straße 30
D-97980 Bad Mergentheim | Deutschland
+49 (0)7931 9647-0
info-de@serapid.com

SERAPID USA INC.
34100 Mound Road
Sterling Heights MI 48310 | USA
+1 586 274 0774
info-us@serapid.com

SERAPID Singapore Pte Ltd
1 George Street #10-01
Singapore 049145 | Singapur
+65 9119 5890
info-sg@serapid.com

SERAPID Italy Office | +39 01 18 00 35 44 | info-it@serapid.com
SERAPID Mexico Office / LATAM | +52 1 442 4 900 701 | info-mx@serapid.com
SERAPID China Office| +86 185 1215 0303 | info-cn@serapid.com
SERAPID Brazil Office | +55 11 9 73 85 78 37 | info-br@serapid.com

SERAPID
RIGID CHAIN TECHNOLOGY

www.serapid.com

SERAPID | REF PLIQOZEN | V1 | 04 2021 | The trademarks and product names used are the property of their owners.
We decline any liability for errors and omissions. | We reserve the right to modify our existing products without notice.

SERAPID
RIGID CHAIN TECHNOLOGY

LINEARBEAM

The rigid-chain actuator with in-line return storage

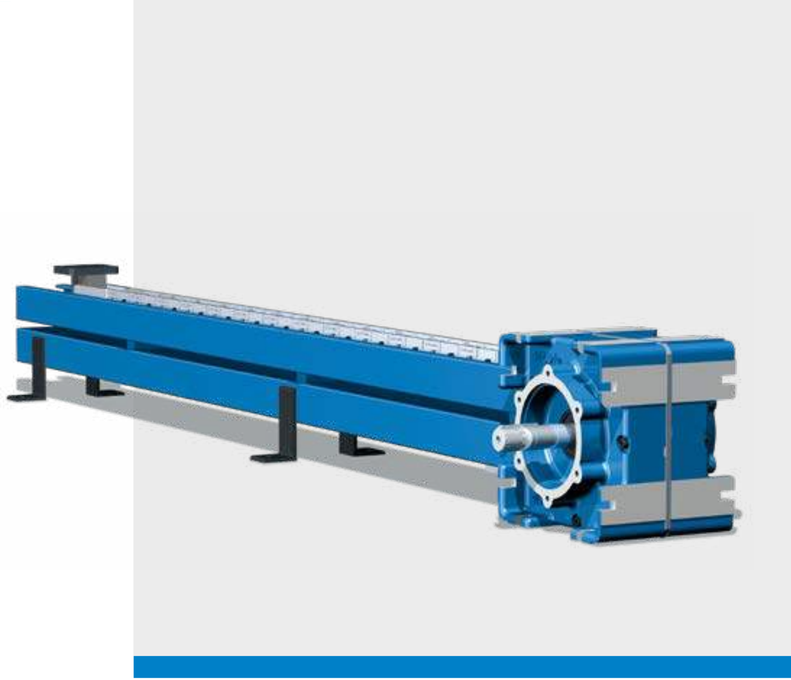

LinearBeam – the rigid-chain actuator with in-line return storage

Our LinearBeam series offers a wide range of actuators for the transfer and handling of heavy loads. Its most prominent feature is SERAPID's widely used and proven rigid-chain technology.

The rigid chain consists of links that interlock with each other under forward thrust and push the load like a solid bar. In the opposite direction, when retracting, the chain remains flexible. In the LinearBeam, it is redirected by 180°, so the returning portion is stored in parallel to the transfer path. This double utilisation of the footprint space makes the LinearBeam easy to install even in confined and difficult environments.

The LinearBeam is completely mechanical, with high reliability, a long lifetime and with an energy efficiency of 80 to 90 percent making it a sustainable investment, ecologically as well as economically.

A comprehensive choice of options allows you to adapt the LinearBeam to your individual requirements. Special versions allow for operation in harsh environments or under heavy-duty, high-cycle conditions.

Application examples

- 30 metres linear actuator system for handling nuclear waste
- motion system for a 200 tonne organ on a stage
- quick die change up to 160 kN (with single actuator), rolling-bolster systems for metal-forming presses
- opening and closing of variable roofs and canopies, e.g. in the roof of the Lisbon Arena over a distance of 16 m
- further applications in kinetic architecture
- material feeding in manufacturing
- steel mills
- furnace loading
- handling and positioning equipment on oil rigs
- load transfer within high-temperature zones
- and many more ...

Features and benefits

- horizontal, vertical and inclined transfer
- rigid-chain technology, totally mechanical operation
- positive, accurate and repetitive positioning in the millimetre range
- simple and robust construction, suitable for special environments, such as clean rooms, high-temperature manufacturing or radiation zones
- space saving, easy to integrate in machine structures
- high reliability, long lifetime, low maintenance
- wide range of options and accessories
- high-cyle operation using oil bath (option)
- standard speed up to 300 mm/s, higher speed on demand (up to 1 m/s)
- powered electrically, hydraulically or pneumatically
- special options: chain made of stainless steel, specific protective coatings, thermal resistance, etc.
- multiple units, easy to configure
- associated services: project engineering, layout assistance, design studies, development, installation, etc.
- certified according to ATEX, Cat. II 2GD c T4

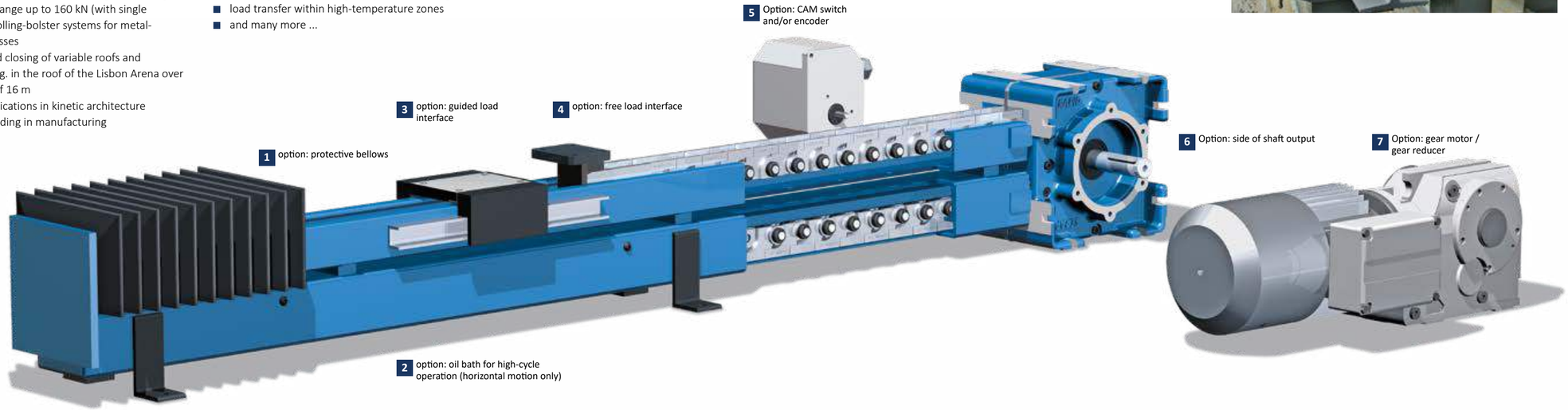

option	designation	application and function	conditions and possibilities
1	**protective bellows**	keeps debris out of guides	includes end caps and mounting brackets; standard with oil bath (option 2)
2	**oil bath**	permanent lubrication	A sealed oil reservoir encloses the lower guide, allowing high operating cycles. (Only for horizontal application.)
3	**guided load interface**	Load is attached to a guided carriage.	absorbs moments and side loads (The load itself is not guided.)
4	**free load interface**	standard load attachment above guide	prevents transmission of moments onto chain
5	**CAM switch and/or encoder**	position detection and control of acceleration and deceleration	The standard CAM switch has 4 positions; additional switches can be installed on request. The encoder can be absolute or incremental.
6	**side of drive shaft output**	side where motor is mounted	shaft output can be to A (left), B (right) side, or both sides
7	**gear motor or gear reducer**	source of power driving the chain; custom-sized per application	mounted on shaft output; electric, pneumatic or hydraulic; voltage regulation or other utility as required